Name of Material: Pre-K Making Collections-Category Cards

Assembly/printing instructions:
Category Cards: Print on cardstock and laminate for durability if you wish. Cut apart on the dotted line. Each pair of children will need one set of the category cards.
Key Cards: Print on cardstock and laminate for durability if you wish. Each page has two key cards on it and should be cut apart to create two cards. Print enough copies so that each pair of children has 2-3 different cards.

Activities this material is used in (Introduced at TR__):
Making Collections (TR2)

Additional Information:

Photo:

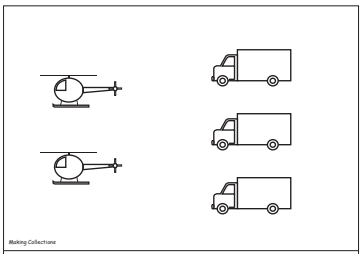

Sample Making Collections key card for TR4

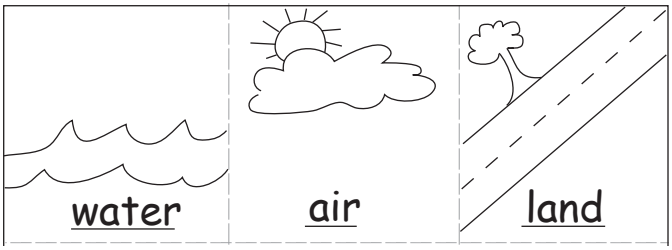

Sample, one set of category cards for Making Collections TR4

Copyright (c) 2012 by Tools of the Mind®. These materials (instructions, copy masters) may be used only by classrooms currently training with Tools of the Mind® or by classrooms whose staff have completed Tools training. All other uses for any purpose are strictly prohibited. To arrange to receive Tools training, visit our website at **www.ToolsoftheMind.org** or send an email to **training@ToolsoftheMind.org**.

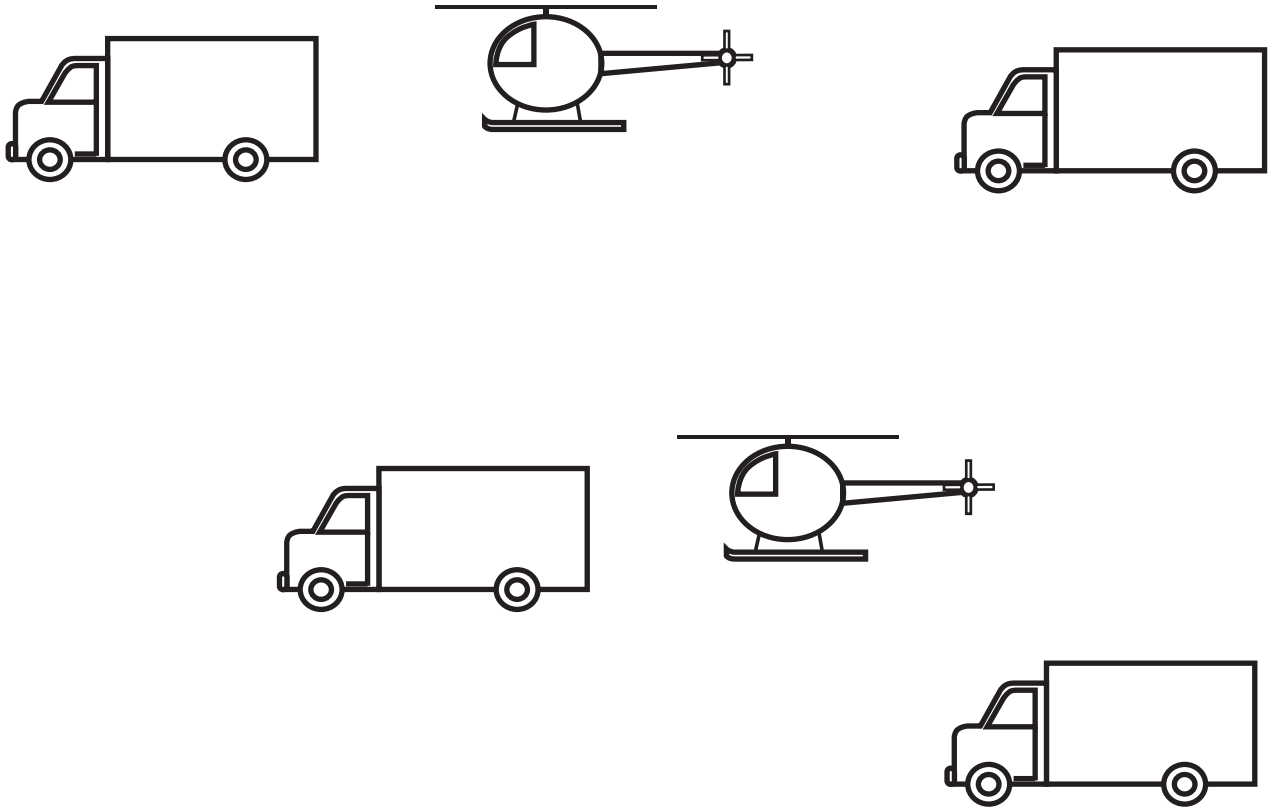

©Tools of the Mind™ Making Collections

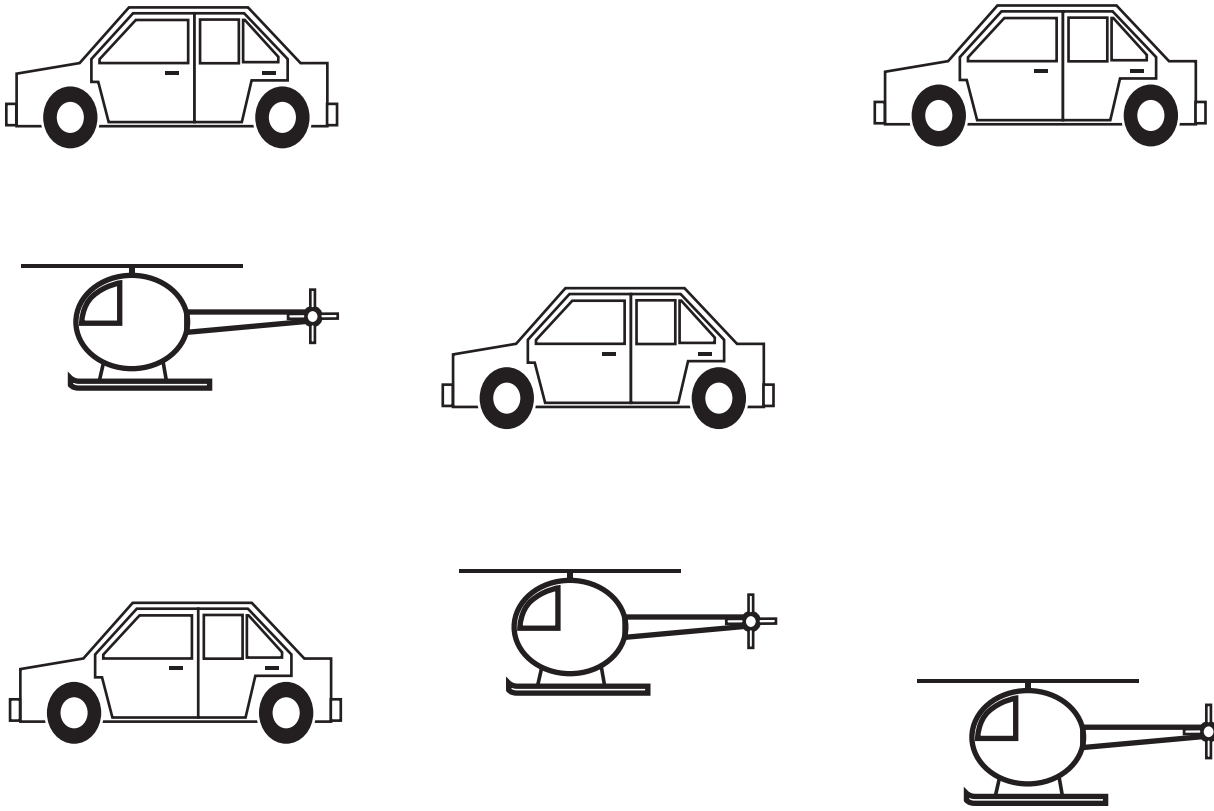

©Tools of the Mind™ Making Collections

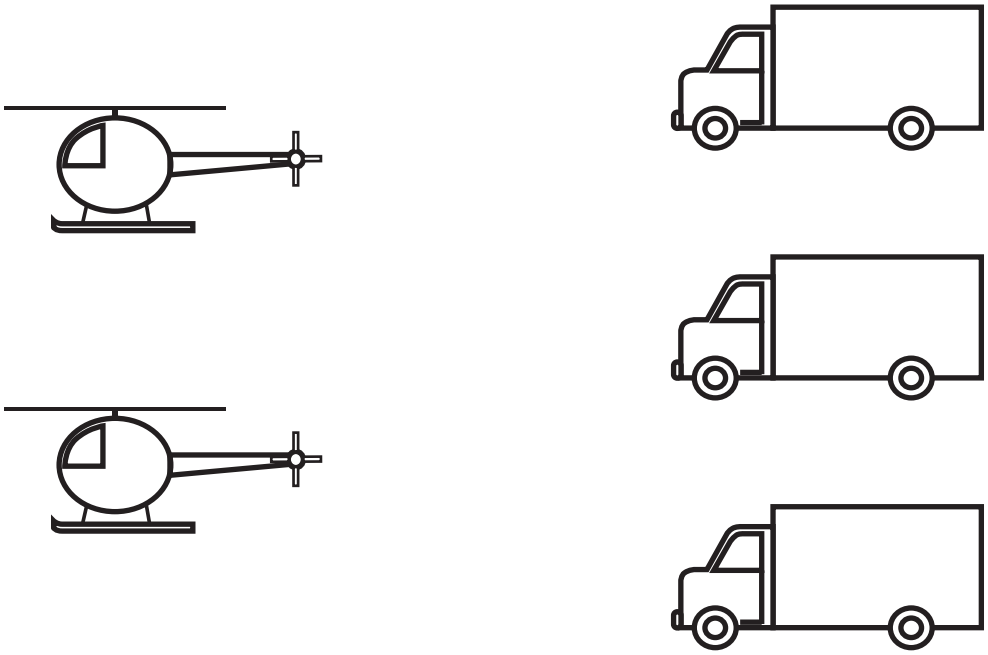

©Tools of the Mind™ Making Collections

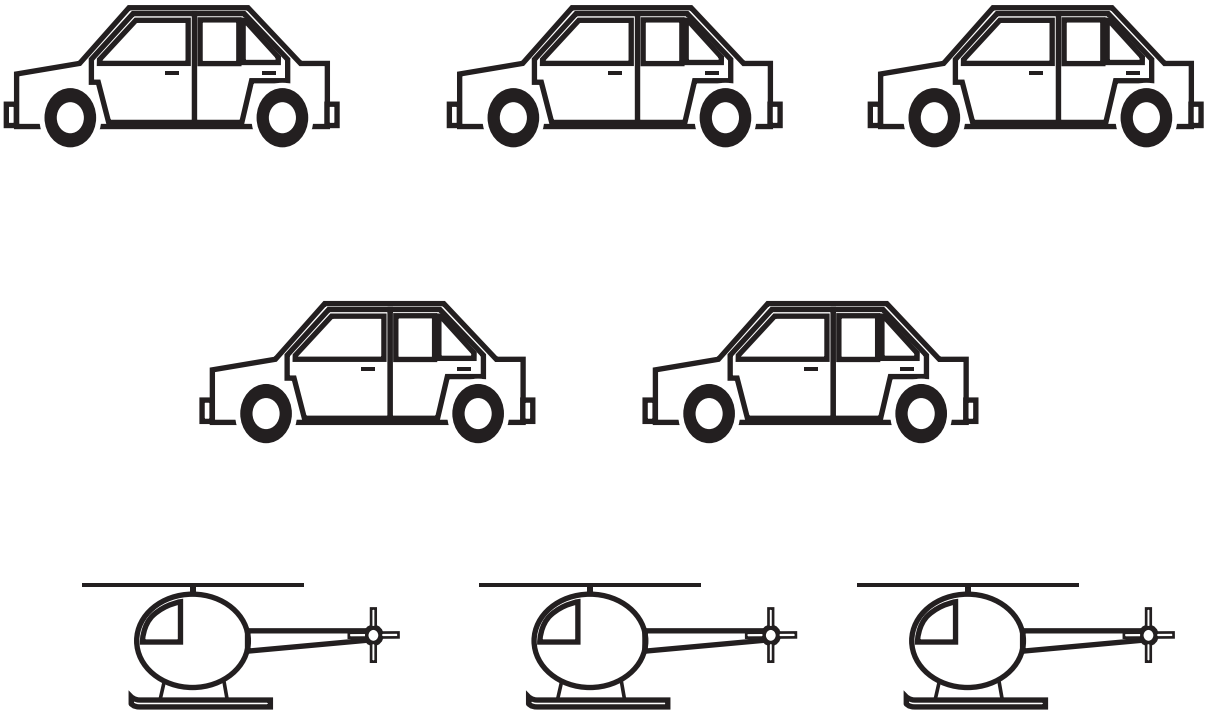

©Tools of the Mind™ Making Collections

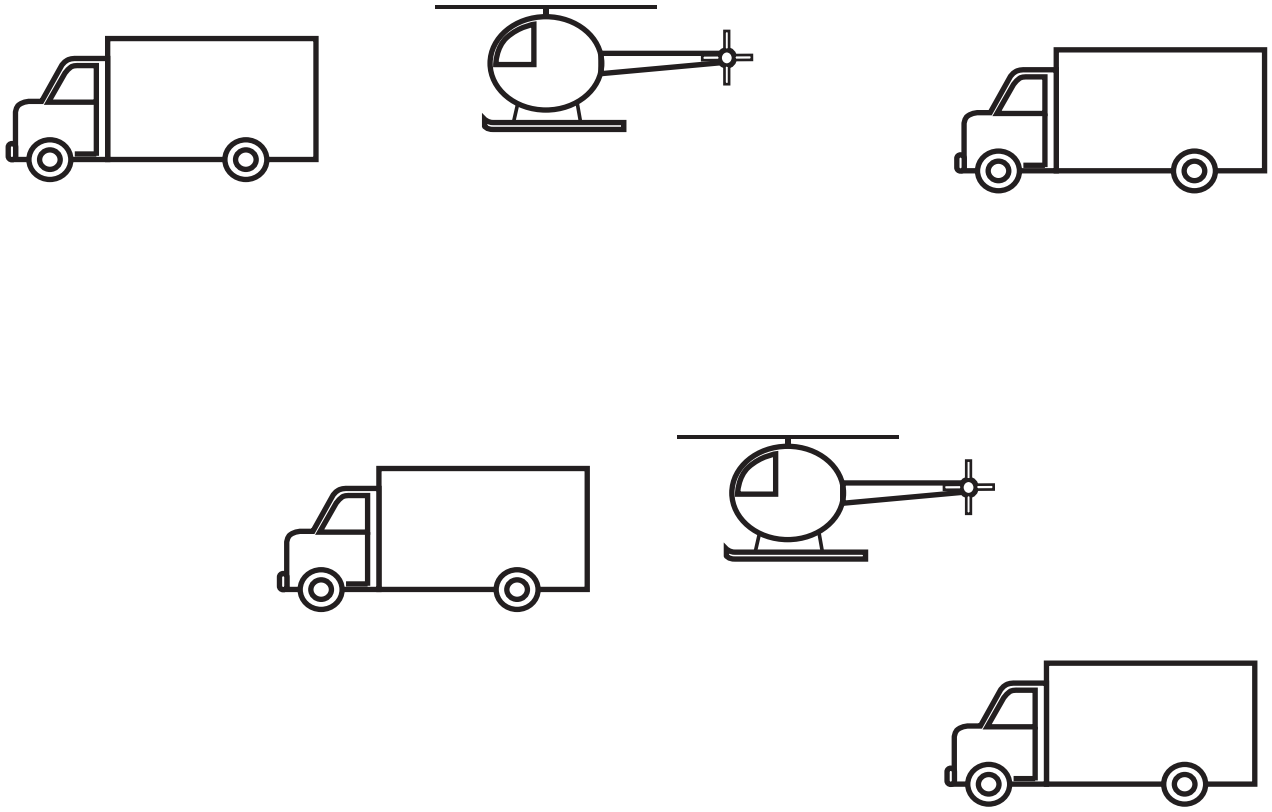

©Tools of the Mind™ Making Collections

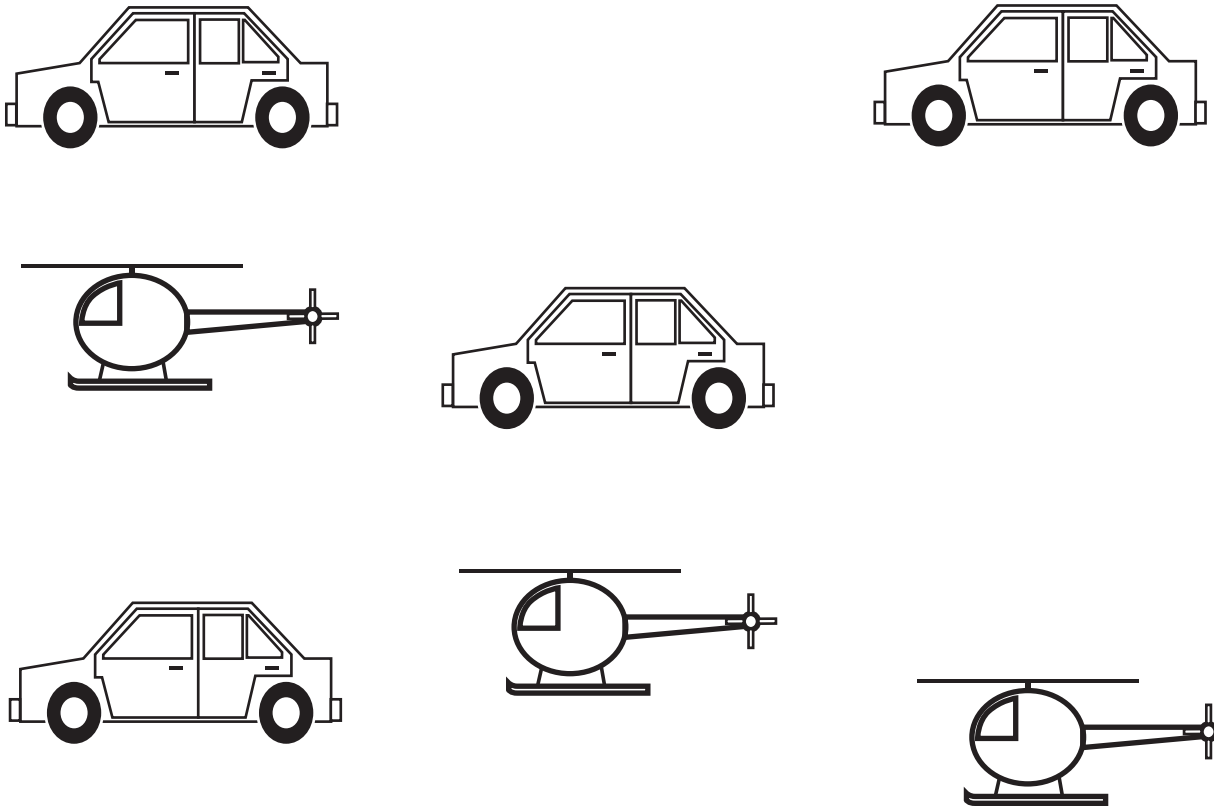

©Tools of the Mind™ Making Collections

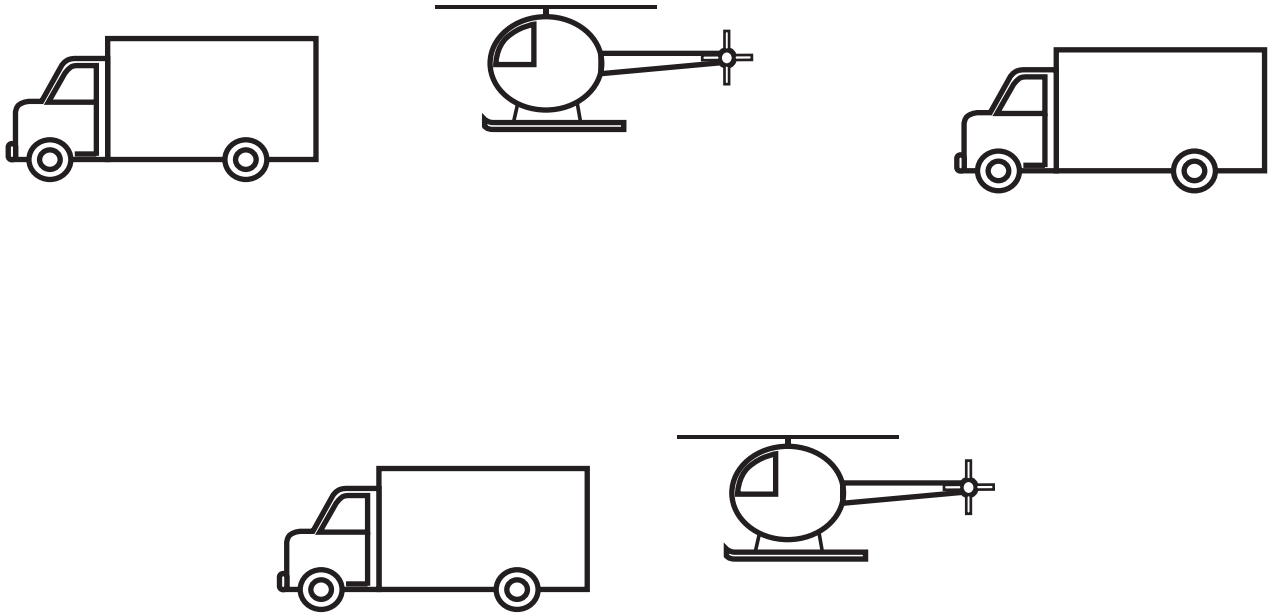

©Tools of the Mind™ *Making Collections*

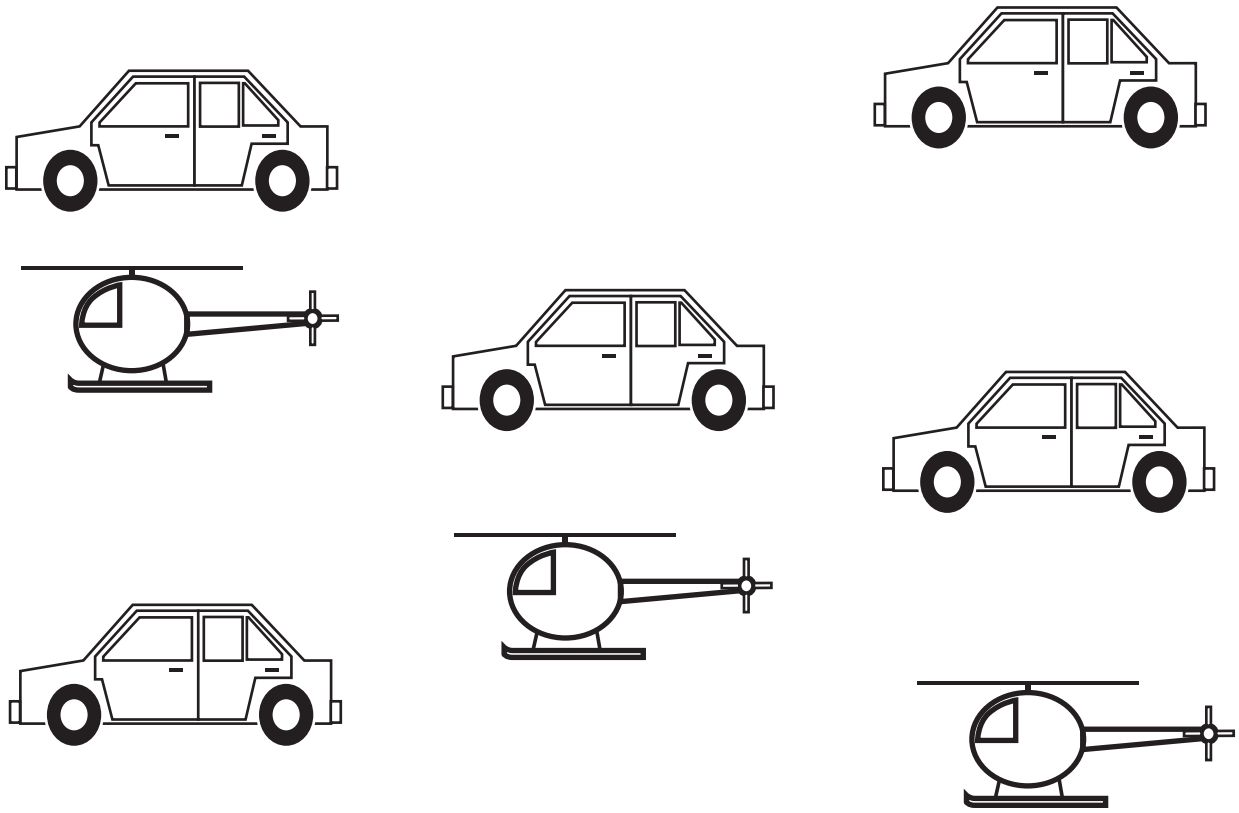

©Tools of the Mind™ *Making Collections*

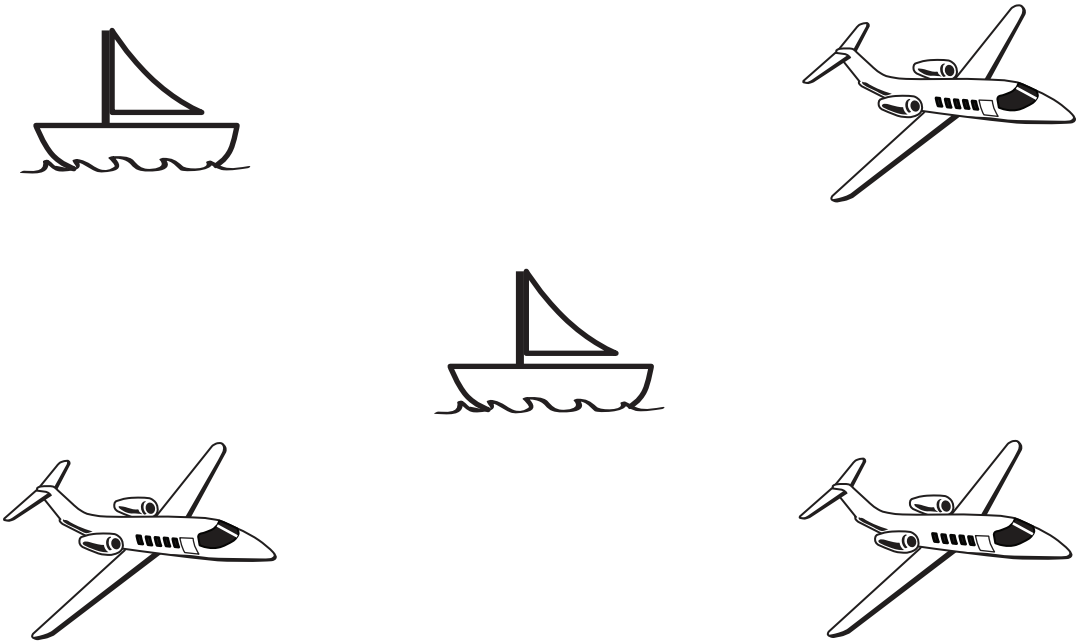

©Tools of the Mind™ Making Collections

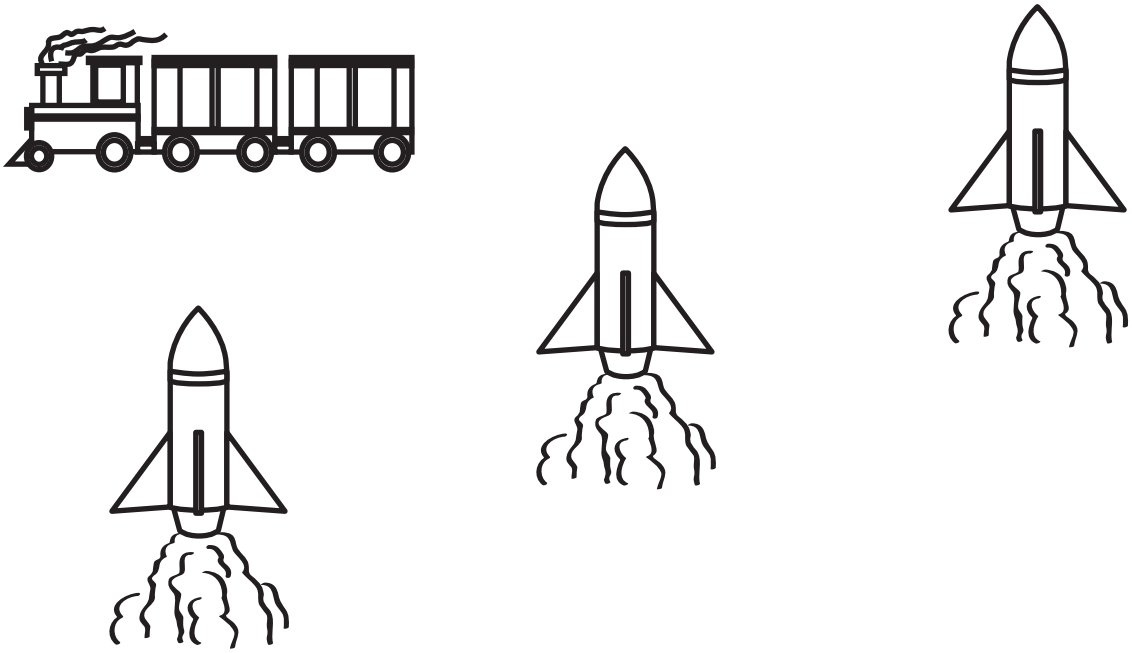

©Tools of the Mind™ Making Collections

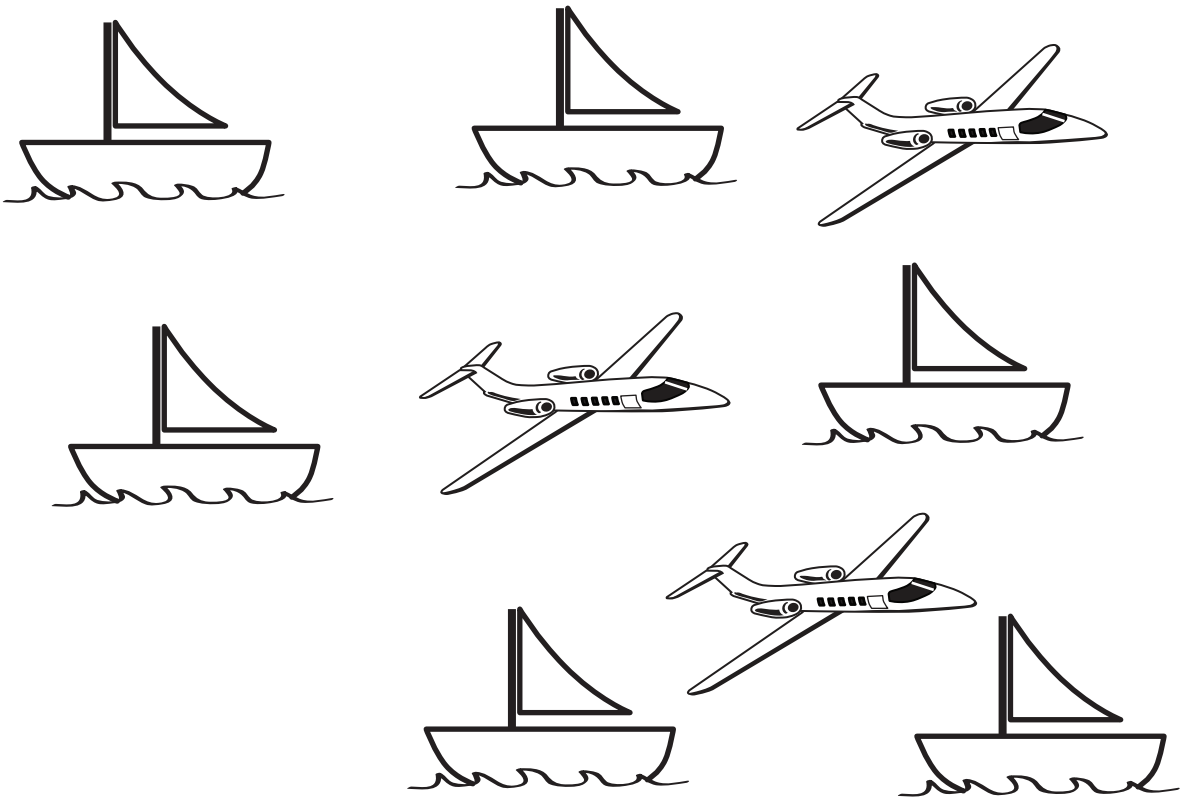

©Tools of the Mind™ *Making Collections*

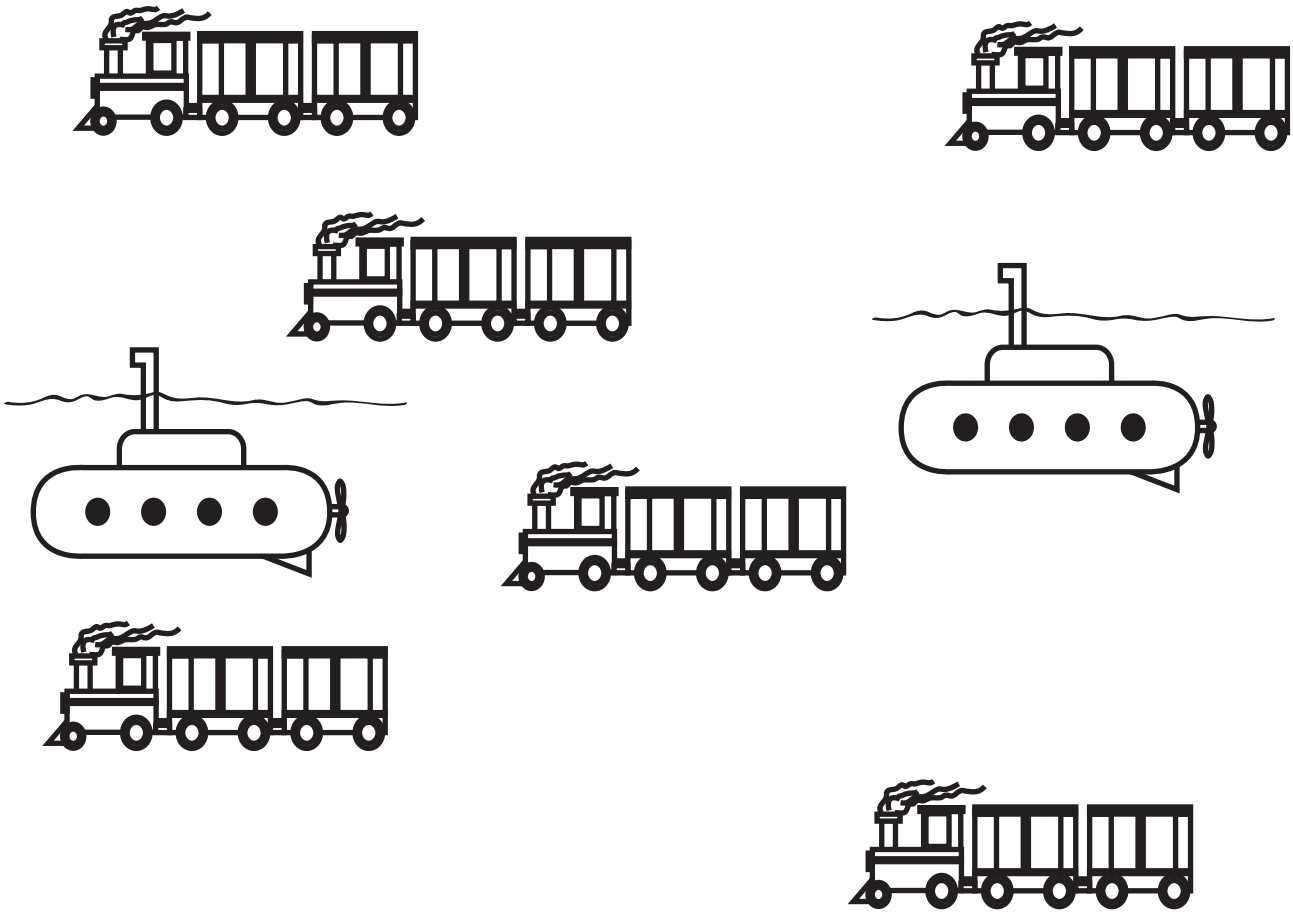

©Tools of the Mind™ *Making Collections*

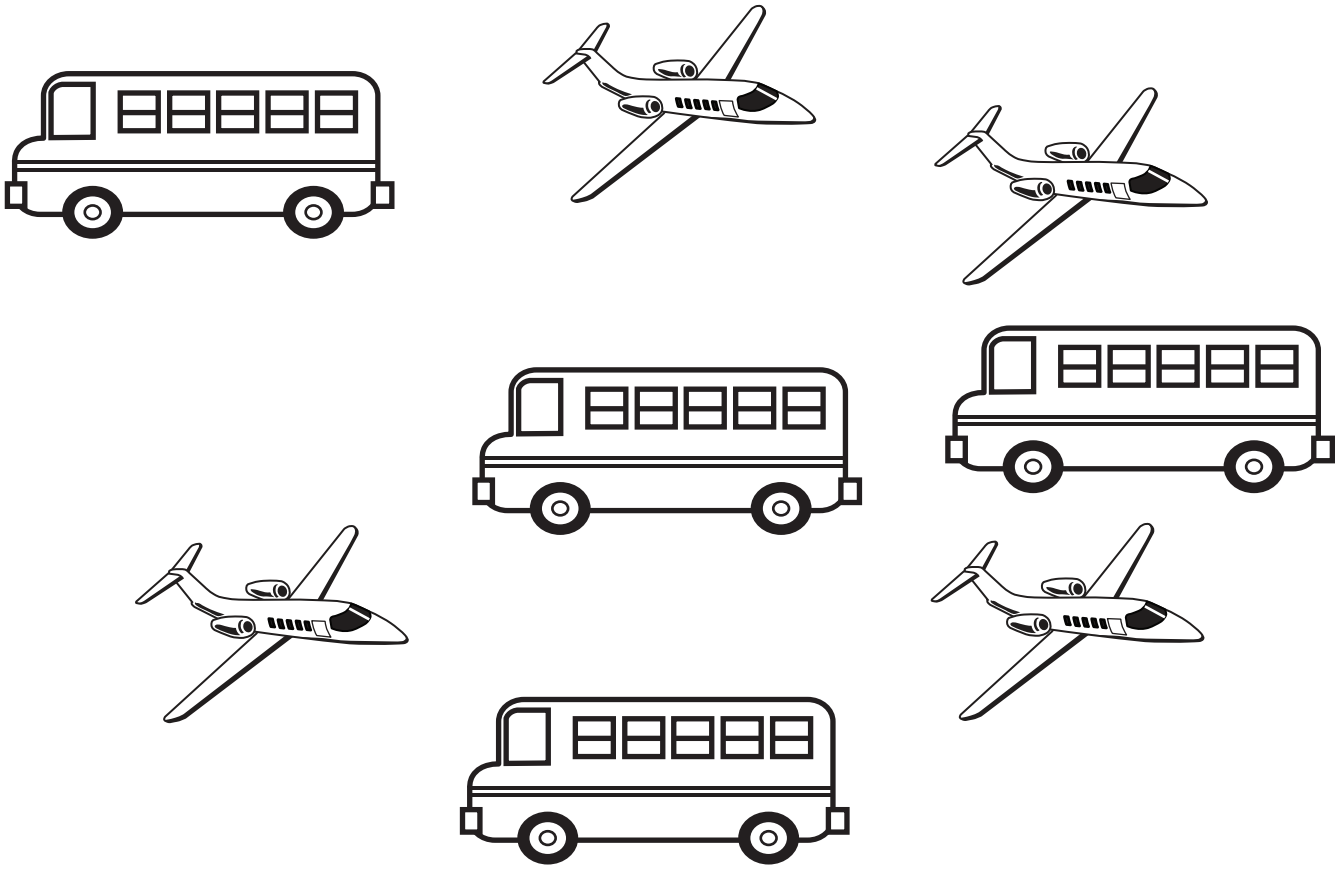

©Tools of the Mind™ Making Collections

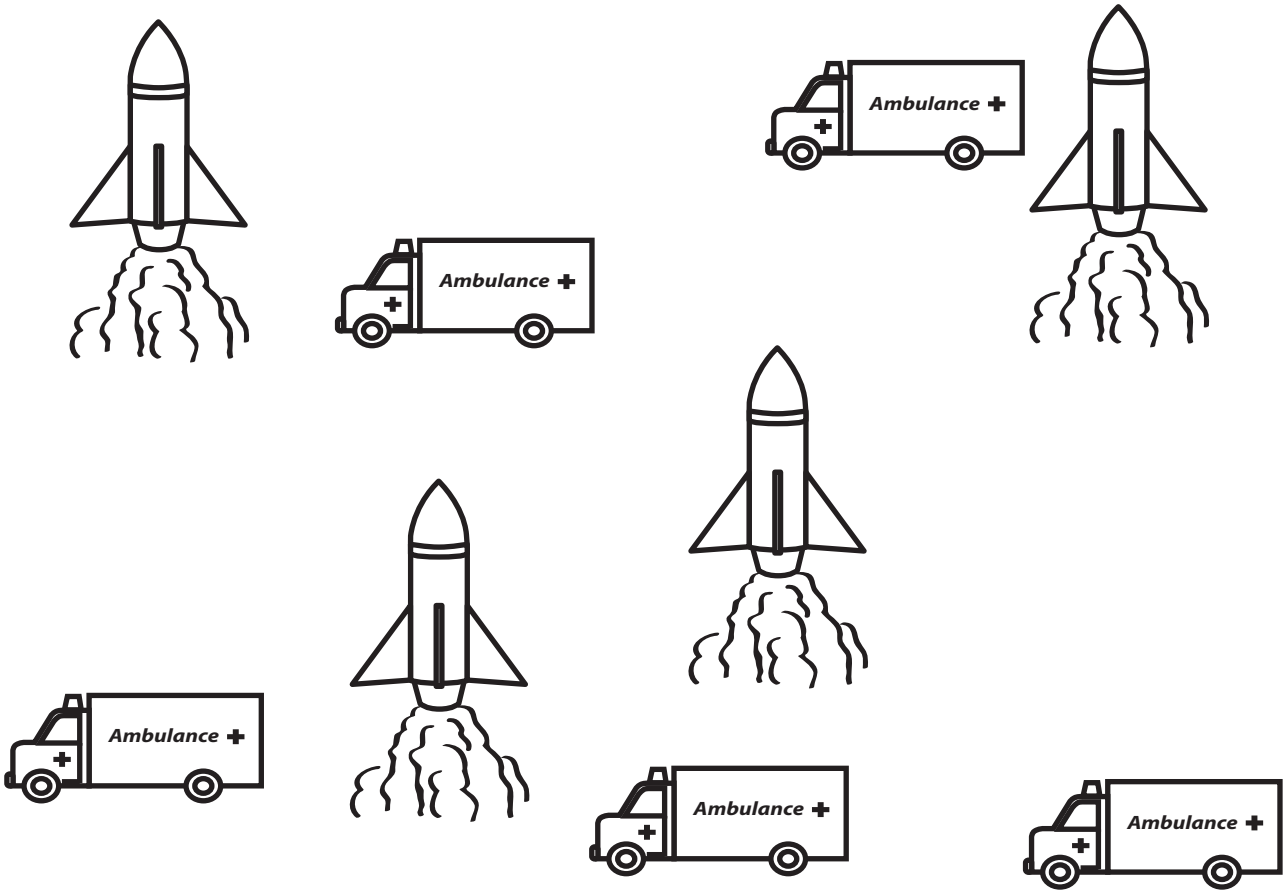

©Tools of the Mind™ Making Collections

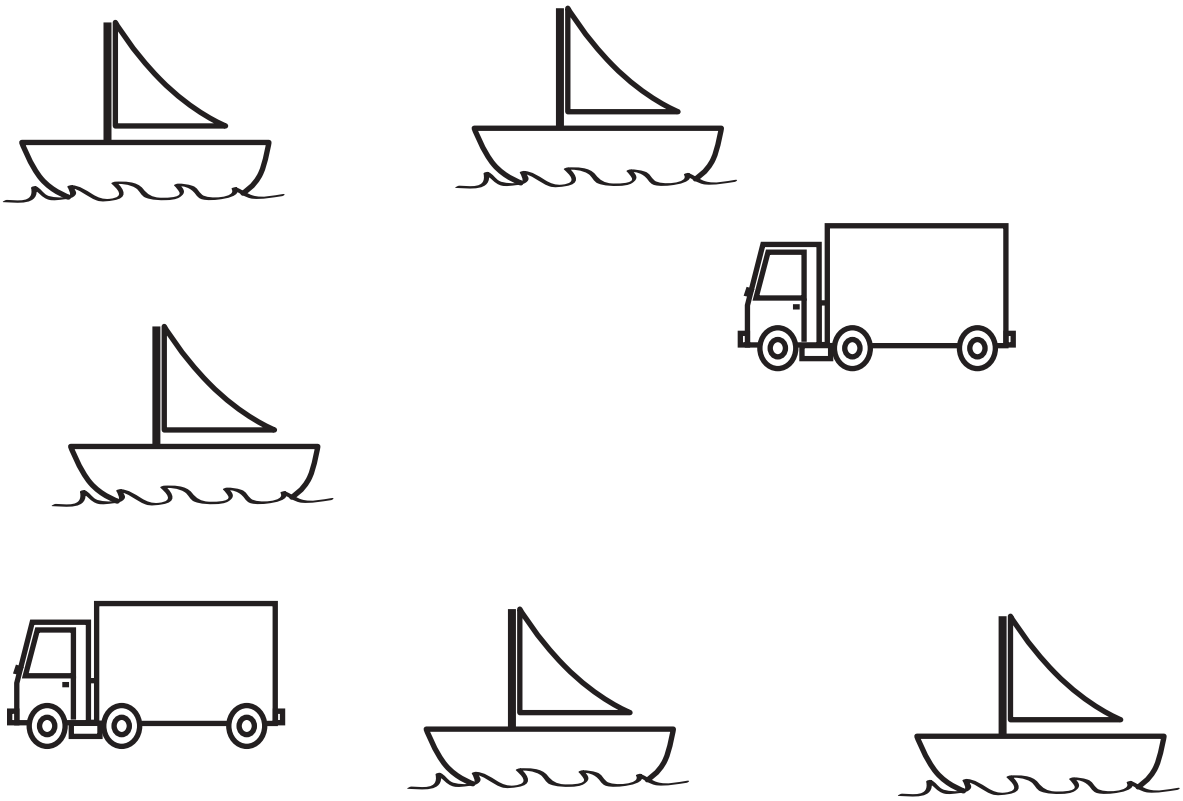

©Tools of the Mind™ Making Collections

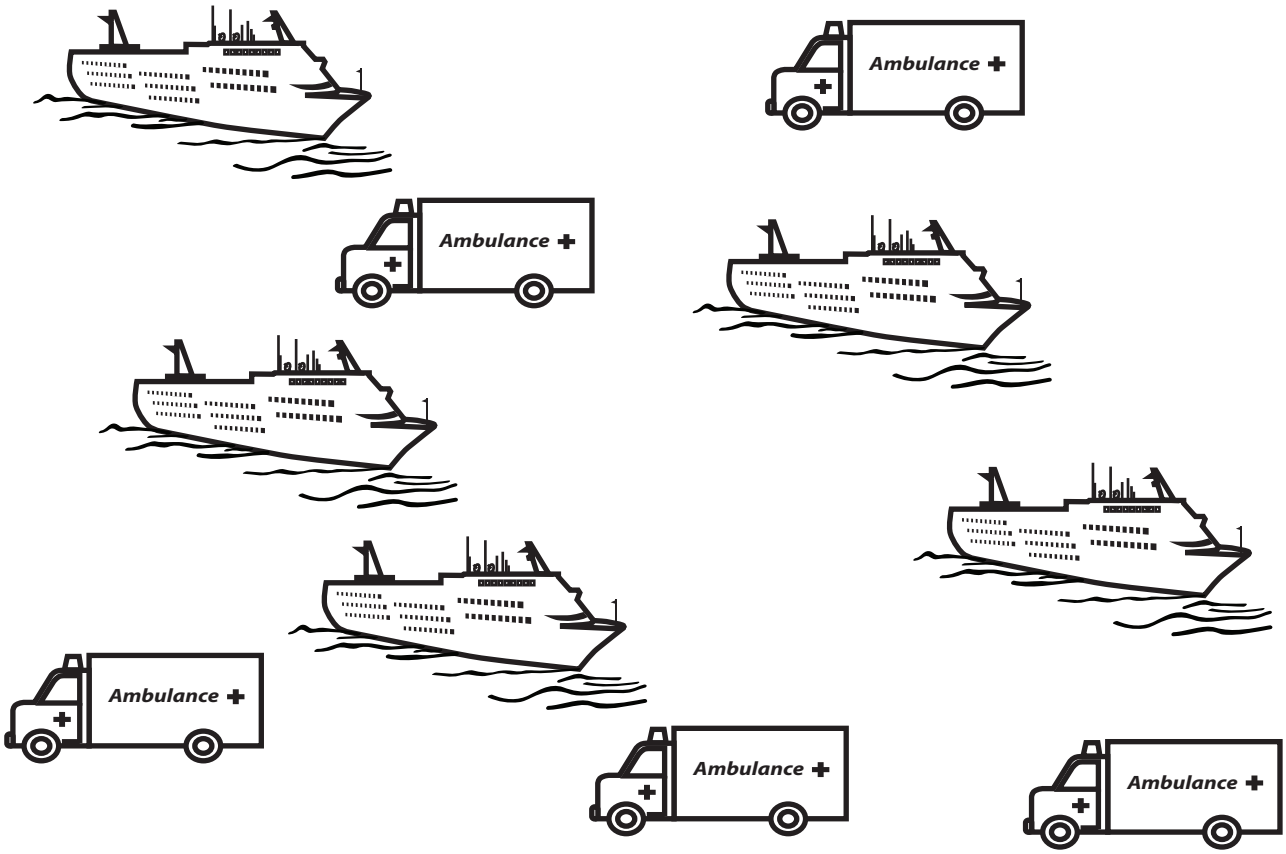

©Tools of the Mind™ Making Collections

water

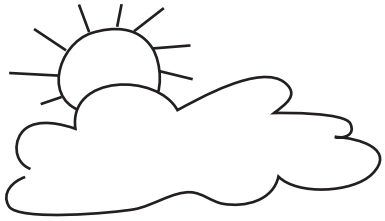

air

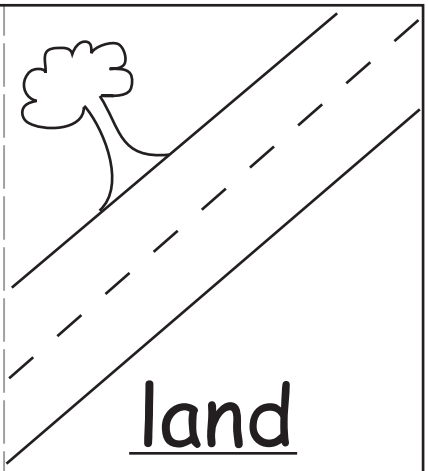

land

water

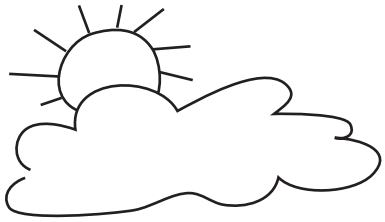

air

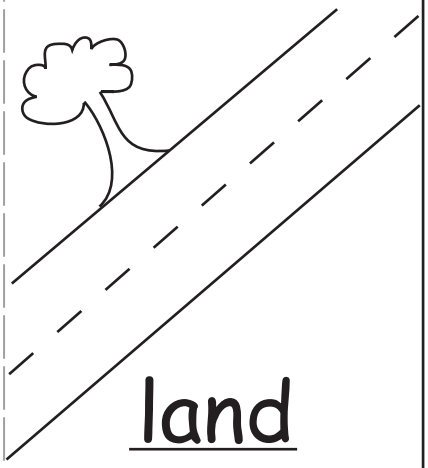

land

water

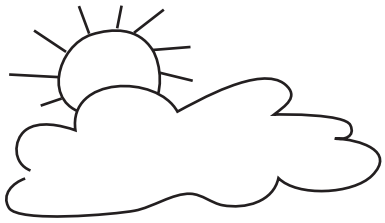

air

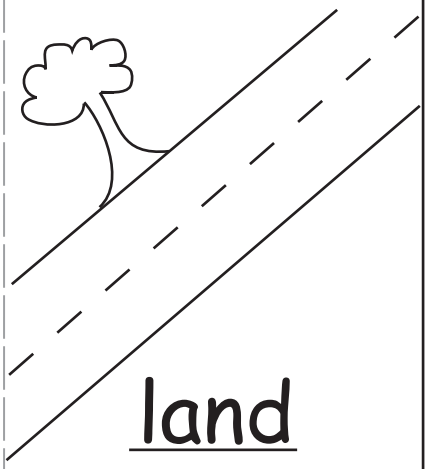

land

water

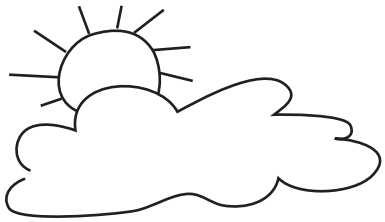

air

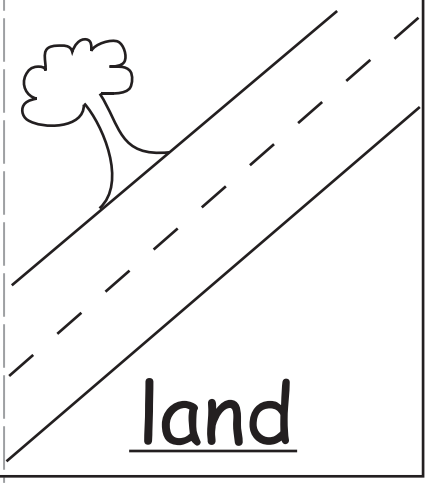

land

©Tools of the Mind™ Making Collections-Category Cards